1. Precautions(Be sure to read before handling)

1.1 Safety Specifications

⚠ Danger:	Indicates an imminently hazardous situation which, if not avoided, will result in death or serious injury.
⚠ Warning:	Indicates a potentially hazardous situation which could result in death or serious injury, if the equipment is operated incorrectly.
⚠ Caution:	Indicates a potentially hazardous situation which may result in injury and machine damage, if the equipment is operated incorrectly.

These safety instructions are intended to prevent hazardous situations and/or equipment damage. These instructions indicate the level of potential hazard with the labels of "Danger," "Warning", or "Caution." They are all important notes for safety and must be followed in addition to International Standards (ISO/IEC)[Note 1], Japanese Industrial Standards (JIS)[Note 2]and other safety regulations[Note 3].

[Note 1] ISO 10218: Robots and robotics devices - Safety requirement for industrial robots
IEC 60204-1: Safety of machinery – Electrical equipment of machine (Part1: General requirement)

[Note 2] JIS B 9960-1: Safety of machinery – Electrical equipment of machine (Part1: General requirement)
JIS B 8433 : Manipulating industrial robots - Safety

[Note 3] Labor Safety and Health Act .....etc.

◎ This product is designed and manufactured as a component for using in general industrial machinery.

◎ Please make sure to aquire the product specifications from the system designer or someone who has sufficient knowledge and experience. In addition, please read the details of the "Technical Manual" and "Software Operating Manual" carefully and take the educational training for related safety prior to operating this product.

◎ If the gripper is integrated in a system (machine, robot, etc.), the system needs to meet the regulations and standards for safety measures. Check if the system satisfies the regulations and standards first. If so, properly handle the product in accordance with the regulations and standards.

◎ All situations are not covered by the "Danger", "Warning", and "Caution" safety signs. For more details, be sure to read the instruction manuals thoroughly before operation.

⚠ Danger

◎Do not use the product outside specifications. It may cause the product to fail, stop functioning or sustain damage. It may also significantly reduce the service life of the product.

◎If the machine will stop in the event of system problem such as emergency stop or power failure, design a safety circuit or other device to prevent equipment damage or injury.

◎Do not use this product in a place exposed to ignitable, inflammable or explosive substances. It may explode or ignite, resulting in product damage or injury. Hot swapping is forbidden.

◎Please follow the instruction manual when wiring the product. For plug in/plug out of the wire, connect to the terminal quickly and reliably.

◎Please do not use the product with water and oil to avoid electric shock or fire.

◎Before supplying power and operating the product, always check the operation area of the

equipment to ensure safety. When operating or adjusting the gripper, be sure to observe safety measures for the system.

◎Please do not disassemble, or modify the product to avoid personal accident, electric shock, fire or damage.

⚠ Warning

◎Do not expose the product to radiant heat generated from a heat source, and use the product within the ambient temperature range of 5˚C to 45˚C.

◎Use the product in humidity range of 35% to 85% (without dew condensation).

◎Please use the product below altitude of 1000 meters.

◎ Please use when environmental illumination is greater than 500 lux.

◎Do not use the product in an atmosphere of corrosive gases (sulfuric acid or hydrochloric acid). Rust may form and reduce the structural strength of the product.

◎Do not use the product in a place exposed to dust, or iron powder. If dust enters the product through small openings and gaps, the product may suffer damage.

◎ Please do not use the product near severe vibration.

◎Please do not use the product near strong electromagnetic waves, locations that may generate high current, welding operations which may generate electric arc, locations that may generate interference due to static electricity to avoid the abnormal operation of product.

◎Please mount the product and jaws with adequate screw tightening torque.

◎Please do not approach or touch the product while the product is operating.

◎ When a person is accidentally caught into the machine, please turn off the power supply immediately or push the emergency stop button of external safety loop device, and then adjust the jaws position or remove the jaws manually for disengagement.

◎Do not touch the connectors or exposed terminals of the controller. Doing so may result in electric shock.

◎Turn off the power to the product in the event of power failure. Failure to do so may cause the product to suddenly start moving when the power is restored, resulting in injury or product damage.

◎If the product is generating heat, smoke, a strange smell or continual noise, turn off power immediately. Continuing to use the product may result in product damage or fire.

◎If the product does not activate while gripping a workpiece, please cut off the power immediately. Remove the workpiece by adjusting the jaws position or removing the jaws manually. After the abnormal state is corrected restart the power.

◎Please do not grip live or hazardous objects.

◎Prevent load from applying force to one jaw when gripping a workpiece.

◎ When the product is activated, please do not apply any external force on the gripper.

⚠ Caution

◎Do not hold moving parts of the product or its cables during installation. It may result in injury.

◎Do not insert a finger or object in the openings in the product. It may cause fire, electric shock, or injury.

◎The motor generates a large amount of heat during operation, and the product surface temperature is high. Ensure this will not affect a workpiece near the gripper.

◎The actuator cables with the product are flexible, but do not store the cables in a movable cable duct that bends more than the specified bending radius. (Rb ≥ 63mm)

◎Do not scratch the actuator cables. Please perform periodic inspections monthly. Scratching, forcible bending, straining, winding, and pinching may cause short circuit and insulation failure, which results in electric shock and malfunction.

◎ When the product is unusable and scrapped, please follow the local waste disposal regulations for handling.

◎ When using this product, please wear safety shoes or the related protective equipment.

◎The mounting face has holes and slots for positioning. Make use of them if necessary.

◎Design the jaws to be lightweight and minimum length.

◎Mass of a workpiece that the jaws can grip greatly differs depending on the material quality, shape, and gripping surface condition of the jaws.

◎Use speed and parameters appropriate with the product to avoid making a great impact to the jaws.

◎Please assure there is sufficient space for maintenance and inspection, and perform regular maintenance every six (6) months or after activating the product 500,000 times.

◎ Please perform maintenance of transmission components in manual mode. After adjusting the gripper to the maximum opening position, please use the greasing device to replenish the grease or apply the grease on the screw shaft and both sides of groove.

◎ The measured result of actual noise level for product is 52.8 dB. (Conditions: distance from the product is 1 meter, height from the ground is 1.6 meters, maximum speed is 80% operating). If the noise level is over 80dB(A) during operation, personal protective equipment is required.

1.2 Warning Sign Location & Description

The warning sign shown below will be on the product to ensure the proper and safe operation.

◎ KK / SK / KC Series:

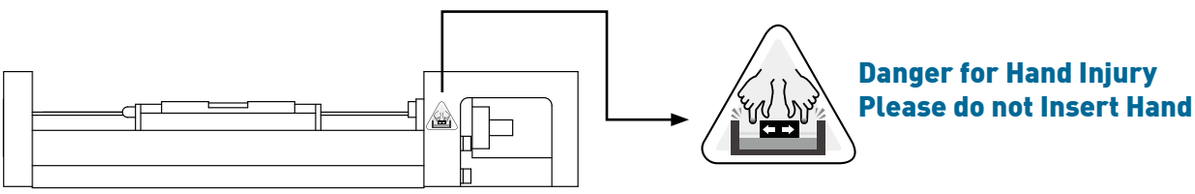

◎ KA / KE Series:

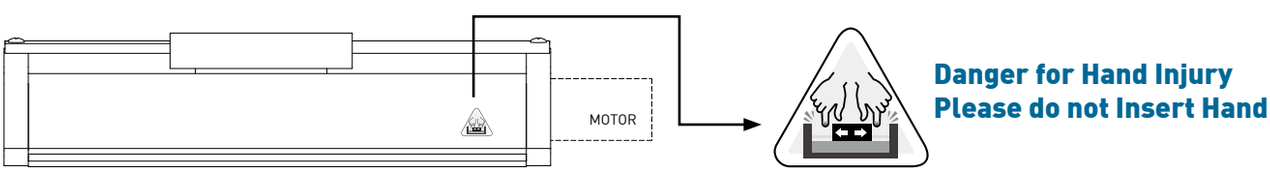

1.3 Features

The HIWIN Single-Axis Robot module utilizes professional standard manufacturing technology developed over the years, with the ballscrew and magnetic slide design module developed and produced by ourselves, HIWIN itis applicable to all types of automation equipment due to its features of easy installation, small size, high-precision and various specifications.

◎Complete selection of single-axis robots and accessories.
Drive type: ballscrew, toothed belt
AC motor output: 30W~750W servo motor or stepping motor
Motor connection type (depends on available space): direct, bottom, internal, left, right
Max stroke:100～2000mm (Dependant on screw speed limit.)

◎Easy installation and maintenance.

◎Customized designs available.

◎Easy transformation into a multi-axis robot.

1.4 Installation guide for motor flange, motor and coupling

◎Three types of displacement may exist while installing the ballscrew with motor axis, which are shown as below.

1. Radial displacement (A):

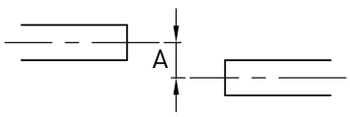

2. Angular displacement (B, degree):

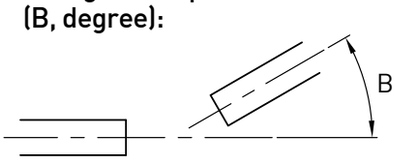

3.Axial displacement(C):

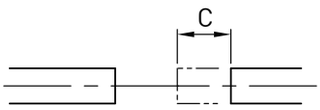

◎Confirmation of axial alignment:

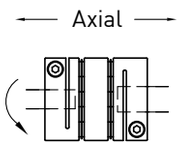

When the ballscrew shaft and motor are connected by a coupling, turn the coupling to confirm if it is capable of rotating without restrictions. This will ensure the concentricity of both axes. The illustration is shown as left.

◎The use of a motor mounting jig might be necessary to make sure the ballscrew spindle end (A) and the positioning hole of the motor flange (B) are concentric. The illustration is shown below.

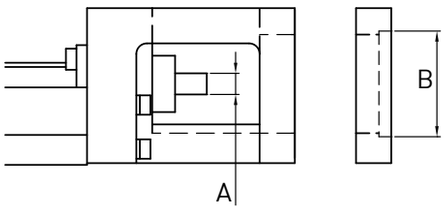

◎Precaution:

1. During motor flange mounting, the displacement between ballscrew spindle end and the positioning hole of the motor flange should be controlled and also within the allowable displacement range of the chosen coupling.

2. The ballscrew spindle end could break if the displacement is beyond the allowable range limit or the coupling is mounted incorrectly.

3. Make sure the allowable displacement of the coupling is sufficient for your application, HIWIN recommends a Disk Type coupling. Please contact HIWIN with any questions regarding coupling installation or selection.

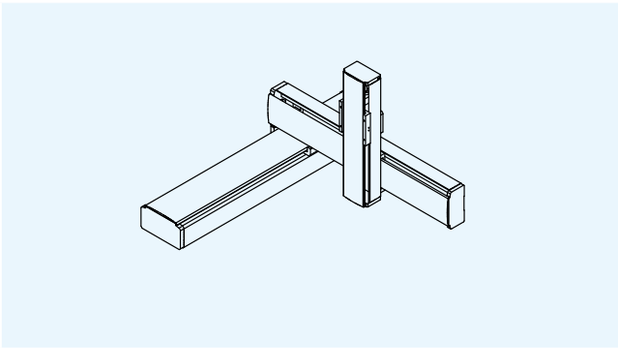
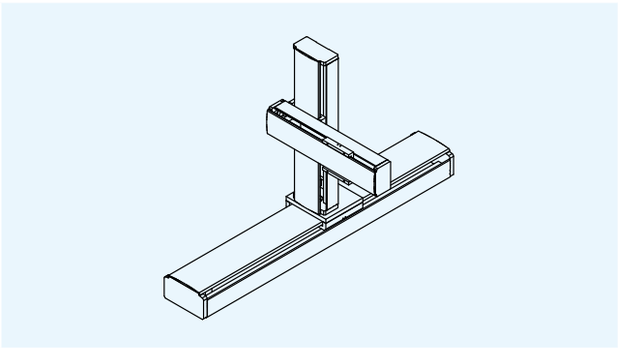
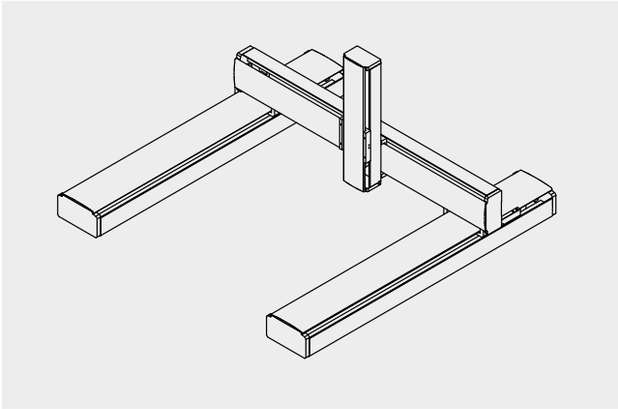
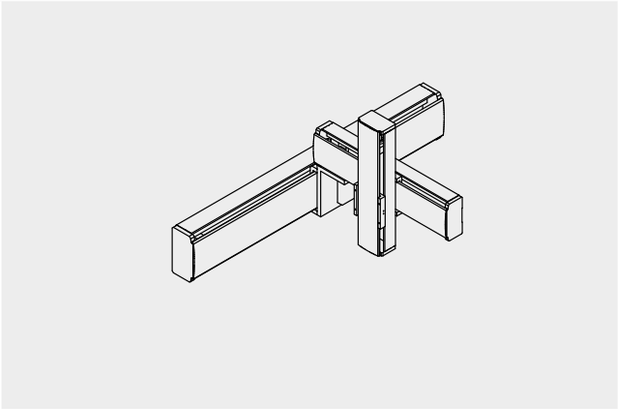
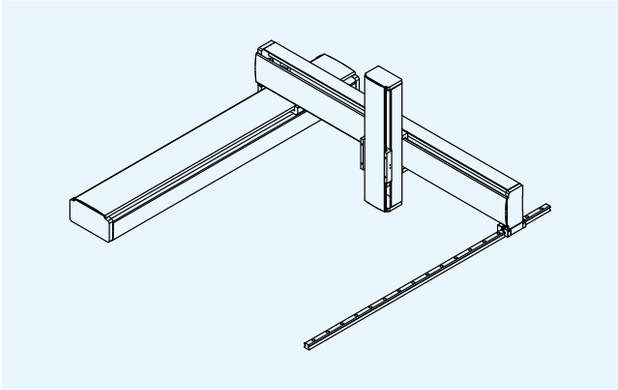
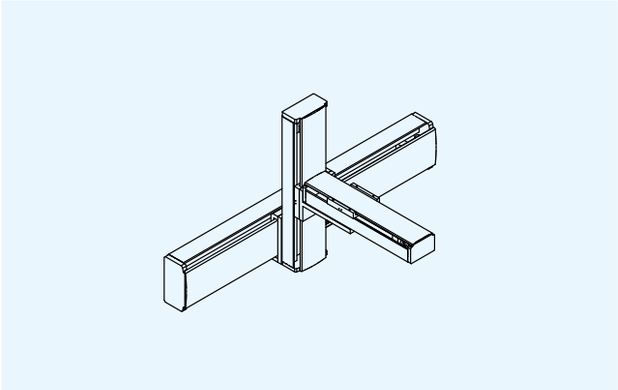
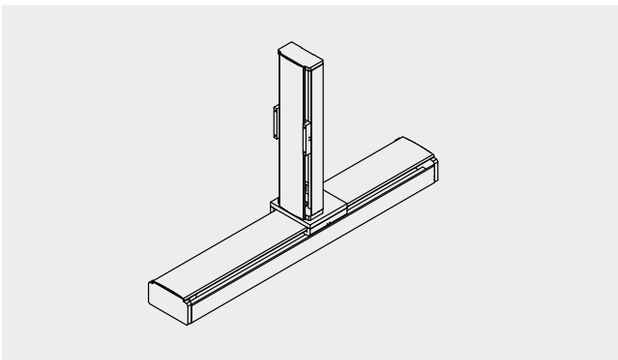
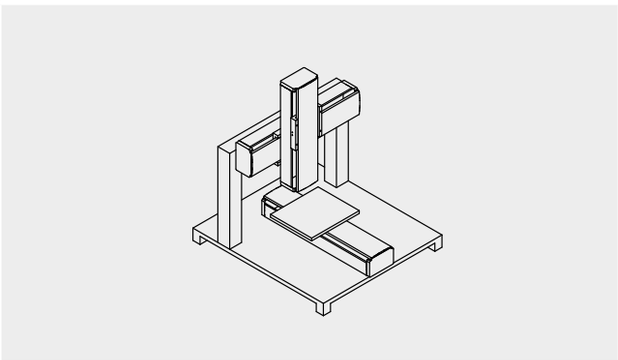

1.5 Applications

Single-axis robots can be used in a wide range of applications. The following are examples of applicable systems: Automatic soldering system, screw feeding machine, adhesive laminating machine, CCD lens shifting, automatic paint spray machine, cutting machine, semiconductor manufacturing equipment, assembly equipment, press machine, spot welding machine, surface processing automation, self adhesive labeling machine, packaging machine, marking press machine, conveying equipment, and more.

1.6 Classification

SPEC	KK High-precision 	SK SynchMotion type 	KC Lightweight 	KA Lightweight 	KS Advanced dustproof 	KU High-rigidity dustproof 	KE Basic dustproof 
30	●		●				●
40	●		●				●
50	●		●				●
60	●	●	●			●	
65							●
70							●
80	●					●	
86	●	●					
90				●	●		●
100	●			●	●		
120				●	●		
130	●						
136				●			
140					●		
150				●	●		
170				●			
180					●		
200				●			

Note: KA100/136/170 and KS100/140/180 can also be belt driven for applications requiring high speed and long stroke.

1.7 System Components

Single-axis robot components include a motor, drive, and upper controller as demonstrated below. Our customers may choose from HIWIN's selection of excellent servo motors, stepping motors, and drives.

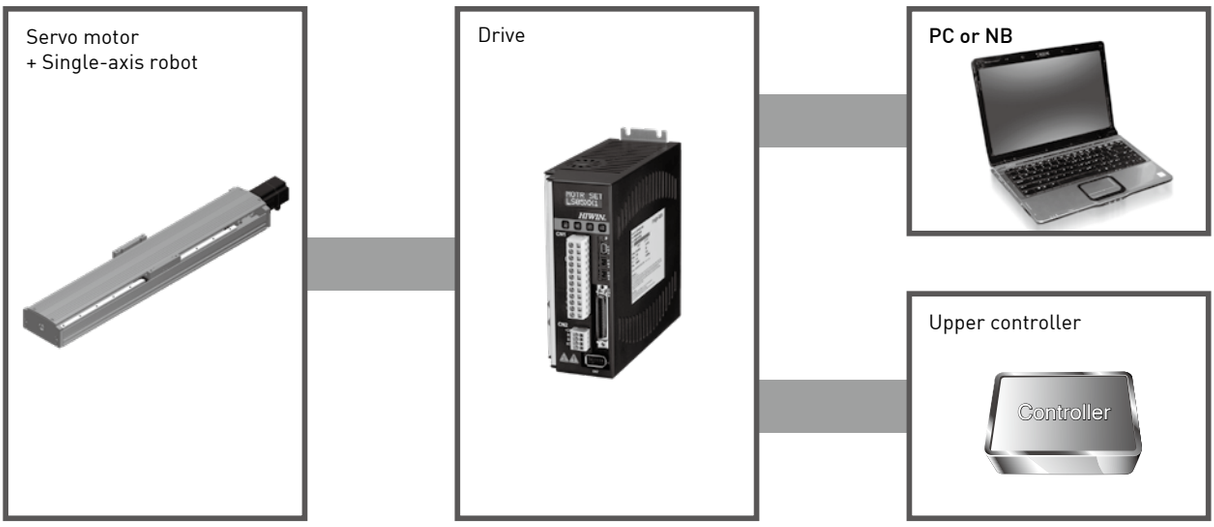

1.8 Selection Process

When choosing an single-axis robot based on different conditions and restrictions, you may refer to the following selection process:

1. User requirements

- Effective stroke
- Location restrictions (width, height, length)
- Installation (horizontal, vertical, side mount)
- Position of gravity, center of loading
- Operating conditions (lead, speed, acceleration and deceleration, duty cycle)
- Environment (high temperature, vibration, oil, water, corrosion)

2. Demand for precision

- Position accuracy
- Repeatability
- Running parallelism

3. Configuration

- Single axis
- Double axis
- Multi axis
- Special combination

4. Motor selection

- AC servo motor
- Stepper motor
- With or without brake (included, plug-in)

5. Motor load calculation

- Maximum speed
- Motor resolution
- Motor torque calculation

6. Operation analysis

- Acceleration
- Actual operation mode (V-T diagram)

7. Other accessories

- The use of related accessories (limit switches, adapter plate, retractable sheath, the slip ring protection tube)

8. Final confirmation

- Conditions of use should be confirmed
- Price, deadline
- Alteration
- Special requirements

For preliminary selection, you may refer to the following single-axis robot characteristics:

SPEC	KK, SK	KC	KA	KS	KU	KE
Precision	Great (repeatability, positioning, parallelism)	Normal (repeatability)	Normal (repeatability)	Normal (repeatability)	Normal (repeatability)	Normal (repeatability)
Load	Heavy	Low	Medium	Medium	Medium	Low
Weight	Heavy	Light	Light	Light	Light	Light
Customized (stroke, lateform)	Yes	Yes	Yes	Yes	Yes	Yes
Stiffness	Good (steel structure)	Normal (Aluminum base combined with steel structure)	Normal (aluminum alloy base)	Normal (aluminum alloy base)	Normal (aluminum alloy base)	Low (guide way base)
Cover	Aluminum	Stainless	Aluminum	Stainless	Stainless	Stainless
Cleanliness	Normal	Good	Normal	Great (with vacuum)	Good	Good
Dust-proof	Normal	Good (fully covered)	Normal	Good (fully covered)	Good (fully covered)	Good (fully covered)
Drive component	Ballscrew (heavy load, good precision)	Ballscrew (good precision)	Ballscrew, belt (long stroke, high speed)	Ballscrew, belt (long stroke, high speed)	Ballscrew (heavy load, good precision)	Ballscrew (good precision)
Connection between motor and ballscrew	Direct, by side belt	Direct, by side belt	Direct, by side belt	Direct, by side belt	Direct	Direct
Inside motor location	No	No	Yes	Yes	No	No
Bellow	Yes (standard)	No	Yes (customized)	No	No	No
Mounting	Top	Top and bottom	Bottom (or top)	Bottom	Any position (bottom, side)	Bottom

1.9 Precision

1. Positioning accuracy

The maximum difference (absolute value) between the actual arrival distance and the reaching distance based on the original setting.

2. Repeatability of round-trip position (precision)

The maximum difference in the entire cycle. The difference in the positioning value measured from a setting position during the round trip movement of the single-axis robot's slider.

3. Running parallelism

(1) The parallelism between single-axis robot module platform plane and module installation plane. Position the scale at the center of the slider, and then put the pointer on the installation plane. Finally, take the maximum deviation value measured in the full stroke as the result.

(2) The parallelism between single-axis robot module platform and the installation datum. Position the scale at the center of the slider, and put the pointer on the installation datum. Finally, take the maximum derviation value measured in the full stroke as the result.

1.10 Speed

1. Maximum linear velocity

The single-axis robot's maximum linear velocity (V) is calculated from the ballscrew speed (S) multiplied by the lead (L).

V(mm/sec)=S(rpm)÷60×L(mm)

2. Maximum rotational speed

The maximum allowable rotational speed of the ballscrew is decided by it's critical rotational speed. If the ballscrew speed exceeds it's critical speed it may result in resonance. Hence, the critical speed is related to the ballscrew length, the critical speed can help to determine the ballscrews effective stroke and total length.

The maximum allowable rotational speed of the ballscrew is calculated as follows:

$$Np = 0.8 \times 2.71 \times 10^8 \times \frac{M_f d_r}{L_t^2}$$

Np = the maximum allowable rotation speed (rpm)
Mf = breakdown of the assembly mounting type; KA uses fixed-support type; Mf=0.689
dr = screw root diameter (mm)
Lt = screw span between bearings (mm)

3. Acceleration/Deceleration

Speed is specified as the working speed of the sliding table. The sliding table must accelerate to the designated speed as it moves to it's target position, in opposite, it must decelerate before it comes to a stop.

Acceleration/deceleration is programmed by the operator according to the needed conditions. The acceleraton on a KA system is set at 0.15G calculated for lead = 5, 0.3G is calculated for all other leads. 1G = 9.8m/s^2, therefore 0.15G = 1470mm/s^2, 0.3G = 2940mm/s^2. The maximum load shown in the catalog is based on this acceleration/deceleration.

Attention Acceleration/deceleration will generate an inertia force on the load. For higher acceleration/deceleration, load will increase accordingly. In addition, higher acceleration/deceleration could generate a possible impact and should be noted.

4. Working cycle

The SR system's working cycle is determined by the operator. The below diagram illustrates how the working cycle is generally calculated. The variables include acceleration time Ta, constant speed time Tc, deceleration time Td, and idling time Tf.

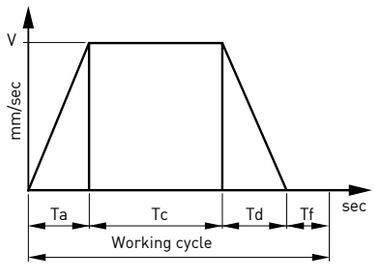

Accelerating Speed=V/Ta
Decelerating Speed=V/Td
Working cycle(sec)= Ta + Tc + Td + Tf
Working time=working cycle × frequency
Operating ratio=working time / (working time+off time)
Operating ratio is closely related to the load of the motor. Normally, the operating ratio is not recommended to exceed 0.5 for long, continuous work.

1.11 Motor Loading Calculation

1. Confirm the moving conditions required by the loading mechanism, including acceleration, deceleration, the weight of the mechanism and it's movement.

2. Momentum loading calculation:
   Momentum calculation for loads moving along a straight line

$$J_L = W \times \left(\frac{V}{2 \times \pi \times N \times 10} \right)^2 = W \times \left(\frac{\Delta S}{20 \times \pi} \right)^2$$

J_L : Momentum of load, calculated to the motors axial output (kg.cm^2)
V : Velocity of load along a straight line(mm/min)
ΔS : Displacement of load per motor rotation(mm)
W : Weight of load (kg)
N : Rotational speed of motor[r/min]

3. Select suitable specification of motor with the proportional principle per the momentums between load and motor.

4. Calculate the acceleration and deceleration torques per the momentum of the selected motor combined with the momentum of the load.

Acceleration torque: $$T_a = \frac{(J_L + J_M) \times N}{9.55 \times 10^4 \times T_{psa}}$$

Deceleration torque: $$T_d = \frac{(J_L + J_M) \times N}{9.55 \times 10^4 \times T_{psd}}$$

J_L : Momentum of load, calculated to the motors axial output (kg.cm^2)
J_M : Momentum of motor (kg.cm^2)
N : Rotational speed of motor (r/min)
T_{psa} : Acceleration/deceleration time(s)
T_{psd} : time (s)

5. Per the loads, installation methods, friction coefficients, and motor efficiency, calculate the torque at uniform motion.

$$T_L = \frac{F \times V}{2 \times 10^3 \times \pi \times \eta \times N} = \frac{F \times \Delta S}{2 \times 10^3 \times \pi \times \eta}$$

F : Axial force moving along a straight line
$F = F_C + \mu x (Wxg + F_0)$
T_L : Load torque (N.m)
F_C : External force exerted in the axial direction (N)
F_0 : External positive pressure exerted by the load onto the single-axis robot (N)
W : Load (including sliding platform) (kg)
μ : Friction coefficient
η : Mechanical efficiency
V : Velocity of load in a straight line (mm/min)
N : Rotational speed of motor (r/min)
g : Gravity (9.8m/s^2)
ΔS : Displacement of load per motor rotation (mm)

6. The maximum output torque of the selected motor should be larger than the sum of the acceleration torque and load torque; if this condition is not met, the model number needs to be changed and calculated until the requirement is satisfied.

7. Obtain the continuous effective torque per the load torque, acceleration torque, deceleration torque, and continuous torque.

$$T_{RMS} = \sqrt{\frac{T_a^{\,2} \times T_{psa} + T_L^{\,2} \times t_c + T_d^{\,2} \times T_{psd} + T_{LH}^{\,2} \times t_h}{T_f}}$$

T_{psa} : Acceleration time t_c : Constant speed time
T_{psd} : Deceleration time t_h : Stop time
T_f : Cycle time T_a : Acceleration torque
T_L : Load torque T_d : Deceleration torque
T_{LH} : Continuous torque (horizontal movement, T_{LH}=0)

8. The rated output torque of the selected motor should be larger than the continuous effective torque; if this condition is not met, the model number needs to be changed and calculated until the requirement is compliant.

1.12 Installation

If the ballscrew is used in the vertical direction (Z axis), the load should be within the maximum value indicated for vertical loading. Vertical installation using timing belts is forbidden.

＊Attention：To prevent the load from slipping off, a brake system is recommended on the motor when the KA module is installed vertically.

1.13 Belt Tension of Motor Side Mount and Belt Drive Module

Motor Side Mount and Belt Drive Module

To avoid ballscrew damage or belt slippage caused by incorrect belt tension, review table1&2 before installing belt.

Table 1 Belt Tension of Motor Side Mount

Model	Blet Specification	Max. Tension (N)
KA100-FL(R、D)	FR-3GT-90W-309L FL-3GT-90W-216L FD-3GT-90W-237L	44
KA136-FL(R、D)	FL(R)-5GT-90W-350L FD-5GT-90W-300L	55
KA170-FL(R、D)	FL(R)-5GT-150W-420L FD-5GT-150W-320L	96
KA200-FL(R、D)	FL(R)-5GT-150W-460L FD-5GT-150W-360L	96
KS100-FL(R)	FL(R)-3GT-60W-234L	44
KS140-FL(R)	FL(R)-5GT-90W-350L	55
KS180-FL(R)	FL(R)-5GT-90W-400L	55
KC40-FL(R)	2GT-60W-160L	15
KC50-FL(R)	3GT-60W-180L	29
KC60-FL(R)	3GT-60W-186L	29

Table 2 Belt Tension of Belt Drive Module

Model	Blet Specification	Max. Tension (N)
KA-100B	HTD 3M-15W	74
KA-136B	HTD 5M-25W	178
KA-170B	HTD 5M-25W	178
KS-100B	HTD 3M-15W	74
KS-140B	HTD 5M-25W	178
KS-180B	HTD 5M-25W	178

1.14 Service life

For horizontal, side or slope (less than 30 degrees) orientation, the service life is dependent on the guideway, as for vertical orientation, the service life is dependent on the ballscrew or fixed bearing which ever one is shorter.

The listed dynamic load (Fy, Fz, Mx, My, Mz) is based on a service life of 10,000km of travel. If the load is less than the loading condition (Fy/Fyd + Fz/Fzd + Mx/Mxd + My/Myd + Mz/Mzd)≦1), the service life could be extended. If the load is over, the service life will be less than 10,000km. To ensure long term use, it is recommended that the loading be within the listed range.

1.15 Maintenance

All the related accessories, ballscrew and guideway need to be maintained. After every 3 months or 100km travel distance, it is recommended to add grease to the ballscrew and guideway. Clean any dust or debris from the system. Replace the grease if there is any color change. If you have any further questions, please contact HIWIN.